Cat® Energy Control System (ECS)

Controller Hardware Manual

Cat® ECS 100
Cat® ECS 200

LEBE20713-01

Caterpillar: Confidential Green
Caterpillar: Confidential Green

THIS PAGE INTENTIONALLY LEFT BLANK

©2024 Caterpillar All rights reserved

Caterpillar: Confidential Green

Contents

1 INTRODUCTION AND SCOPE 4

2 SAFETY 5

2.1 ELECTRICAL SAFETY 5

2.2 ELECTROSTATIC DISCHARGE AWARENESS 5

3 BASICS 6

3.1 MODULE OVERVIEW 6

3.2 PHYSICAL 6

3.2.1 Environmental 6

3.2.2 Dimensions 6

3.2.3 Interface 7

3.2.4 Mounting/Installation 8

3.2.5 Grounding 10

3.2.6 Wiring Requirements 10

3.3 POWER REQUIREMENTS/SPECIFICATIONS 12

4 COMMUNICATIONS 14

4.1 CAN 14

4.2 RS-485 14

4.3 4-WIRE ETHERNET 14

4.4 2-WIRE ETHERNET 15

5 INPUTS 16

5.1 DISCRETE INPUTS 16

5.2 ISOLATED DIGITAL INPUT 16

5.3 ANALOG INPUTS 16

5.4 MPU SENSING INPUTS 19

6 OUTPUTS 20

6.1 DISCRETE OUTPUTS 20

6.2 ANALOG OUTPUTS 20

6.3 PWM OUTPUTS 21

7 AC SENSING 22

7.1 AC METERING ACCURACY 22

7.2 VOLTAGE SENSING 22

7.3 CURRENT SENSING 23

8 PROGRAMMING 24

APPENDIX A CONNECTORS, WIRING, AND PINOUT 25

©2024 Caterpillar All rights reserved

Caterpillar: Confidential Green

1 Introduction and Scope

This document is intended to provide hardware information for the Cat® Energy Control System controller. The information contained herein is not intended to outline a control system design strategy, but rather provide component hardware details. Software details are provided in different documentation.

The hardware is not specific to one application. Each application will nave specific software and additional components to make a complete control system. Therefore, the following documents contain important information that may be needed for the complete control system:

- Application specific software manual
- Touch Screens Manual
- Expansion Module Manual (DIO, RTD, TC, Annunciators, remote ethernet modules)
- CDVR Manual
- MODBUS Register List
- SCADA Manual
- Detailed Wiring Diagrams

©2024 Caterpillar All rights reserved

Caterpillar: Confidential Green

2 Safety

2.1 Electrical Safety

DO NOT operate or work on a generator set unless you have read and understand the instructions and warnings in the Operation and Maintenance Manual. Failure to follow the instructions or heed the warnings could result in injury or death. Contact any Cat® dealer for replacement manuals. Proper care is your responsibility.

2.2 Electrostatic Discharge Awareness

EMCP 4 control contains components that are sensitive to ELECTROSTATIC DISCHARGE (ESD). An electrostatic charge can damage the control resulting in EMCP 4 breakdown or improper operation.

Take the following precautions while installing/removing/handling the control:

- Handle equipment correctly. Use ESD protective packaging and material handling containers that are antistatic and provide discharge protection and electric field suppression.
- Use protective devices: ESD-protective workstations and/or work surfaces (grounding mat, anti-static wrist strap, etc.).
- Keep all plastic items away from the devices. Any plastic item is a potential static generator. This includes candy wrappers, foam cups, synthetic carpet, foam cushions, etc.
- The anti-static bag cannot function as a static dissipating mat.
- DO NOT use an anti-static bag for any other purpose than to enclose a product.

Caution: The connectors on the face of the controller are the most vulnerable areas to ELECTROSTATIC DISCHARGE (ESD). While handling the controller, extra attention is required to these areas. The control may become damaged or inoperable if extra care is not taken.

Note: Locking out the generator set does not necessarily remove voltage on the controller at the voltage sensing leads. Consult the Electrostatic Discharge Association for proper procedure during particular situations: http://www.esda.org.

©2024 Caterpillar All rights reserved

Caterpillar: Confidential Green

3 Basics

3.1 Module Overview

The controller is a single piece of hardware intended to be used in a variety of applications. The functions available will depend on the software loaded onto it.

The controller has the following signal interfaces:

- Four 4-wire ethernet ports
- Two 2-wire ethernet ports
- One Primary CAN port
- One Accessory CAN port
- One RS-485 Port
- Twelve Digital Inputs
- One Isolated Digital Input
- Twelve Sinking Digital Outputs
- Three Analog Inputs (with a single 5V supply)
- Two Analog Outputs
- Three PWM Outputs
- Two 3-Phase AC Voltage sensing Inputs
- One3-Phase AC Current sensing Input
- One MPU port

3.2 Physical

3.2.1 Environmental

The controller has the following environmental specifications:

- Control module operating temperature: –40°C to 70°C
- Maximum surrounding temperature: 50°C
- The packaged controller is rated IP20.

3.2.2 Dimensions

The controller has the dimensions listed in Table 1 and Figure 1.

Table 1: Controller Dimensions

Dimension	Measurement
Width	286mm
Length	200mm
Height	51mm (81mm with tallest mating connector installed – see Appendix A)

©2024 Caterpillar All rights reserved

Caterpillar: Confidential Green

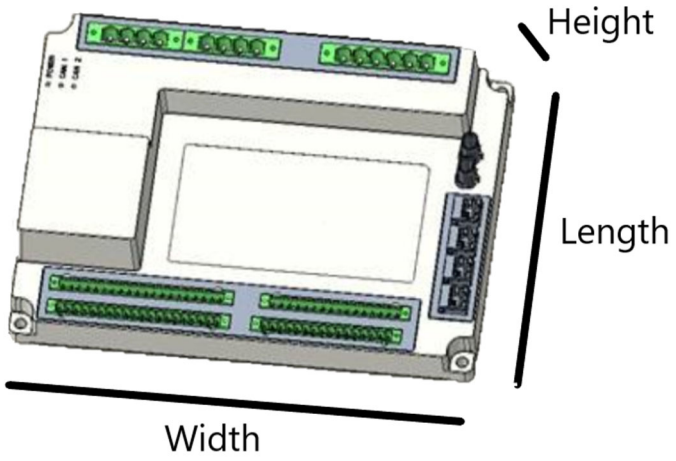

Figure 1: Controller Dimensions

The wire bend radius must also be considered for the height of the final installation. The height listed does not consider any mounting hardware.

3.2.3 Interface

Figure 2 shows the interfaces on the controller.

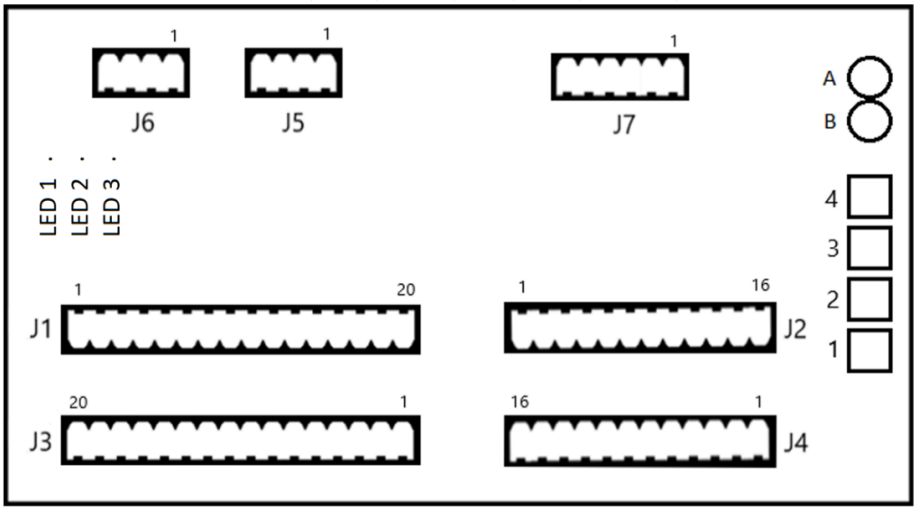

Figure 2: Controller Interface

The general functions of each interface are summarized in Table 2.

©2024 Caterpillar All rights reserved

Caterpillar: Confidential Green

Table 2: Controller Interfaces

Interface	Connector	Function
J1	20-pin spring terminals	Digital Inputs
J2	16-pin spring terminals	Analog Outputs, PWM Outputs, MPU, Accessory CAN
J3	20-pin spring terminals	Digital Outputs, Primary CAN, Control Power
J4	16-pin spring terminals	Analog Inputs, START, RS-485, IVR PWM Output
J5	4-pin spring terminals	Line side voltage sensing (4-wire, 3-phase)
J6	4-pin spring terminals	Load side voltage sensing (4-wire, 3-phase)
J7	6-pin spring terminals	Line side current sensing (6-wire, 3-phase)
A*	Key A	2-wire ethernet
B*	Key B	2-wire ethernet
1*	RJ-45	4-wire ethernet with LED**
2*	RJ-45	4-wire ethernet with LED**
3*	RJ-45	4-wire ethernet with LED**
4*	RJ-45	4-wire ethernet with LED**
LED 1*	-	Power/Firmware Status/Diagnostic***
LED 2*	-	CAN 1 Communication
LED 3*	-	CAN 2 Communication

*See software specific documentation for the function of this interface.
** Green solid = link; Green flicker = port in use; off = no network detected
*** Off: No Power; Green Solid: Normal Operation; Green Blinking: Firmware update in progress; Red Solid: Hardware Failure or Controller in Reset; Red Blinking: Blank Controller

Note: Depending on the software loaded into the controller, specific pins or functions may not be available for use.

3.2.4 Mounting/Installation

When selecting a mounting location for the controller, consider the following:

- Protection from high-voltage and high-current devices.
- Protection from devices which may produce electromagnetic interference.
- Protection from excessive vibration. The controller is designed to withstand normal generator set vibrations. It should not be mounted directly to the engine block.
- Protection from direct exposure to water. The controller is sealed to an IP level of 20.

If moisture condensation is a concern, the recommended mounting orientation is with the J5, J6, and J7 connectors at the top, left, or right when the controller is mounted vertically.

The controller mounts via hardware to a flat surface of a Type 1 enclosure at the four corners. Mounting isolators are recommended for vibration. The mounting hole pattern is shown in Table 3 and Figure 3. These dimensions depict the distance from the center of the mounting holes.

©2024 Caterpillar All rights reserved

Caterpillar: Confidential Green

Table 3: Controller Mounting Hole Locations

Dimension	Measurement (mm)
A	271
B	185
C/D	7.5

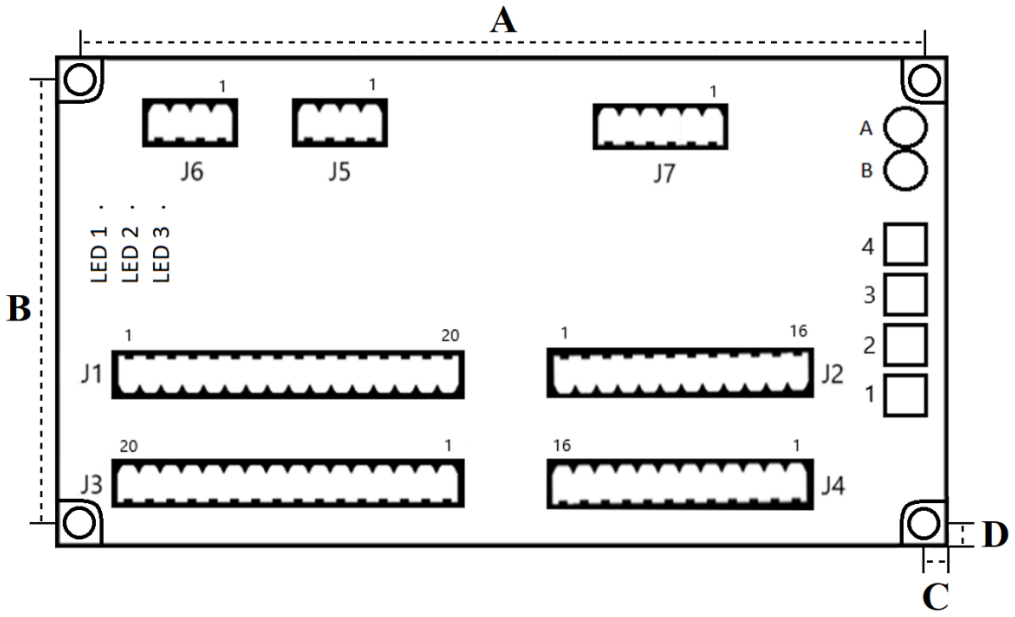

Figure 3: Mounting Hole Locations

The four mounting holes are 6.5mm across. The case is 9mm thick at the mounting holes. Table 4 and Figure 4 show the case limitations for the mounting hole hardware. Curve A (orange) has a larger diameter than curve B (red), which has a larger diameter than curve C (green). Curve B is approximately 0.5mm higher than curve C. So, if a washer is used on the top of the case, it must fit within the diameter of curve C. Any bolt head/flange must fit within the diameter of curve B, as long as it stops at least 0.5mm above the case. Any socket used for assembly must have a diameter no more than that of curve B or C, depending on the type of bolt head/flange.

Table 4: Bolt Hole Dimensions

Curve	Diameter (mm)
A	17
B	16
C	15

©2024 Caterpillar All rights reserved

Caterpillar: Confidential Green

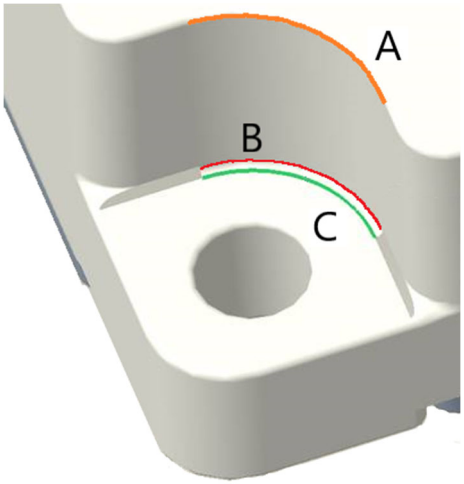

Figure 4: Bolt Hole Dimensions

The communication, sensor, and/or battery derived circuit conductors shall be separated and secured to maintain at least 6mm (1/4 in.) separation from the generator and mains connected circuit conductors unless all conductors are rated 600 Volts or greater.

Communication circuits shall be connected to communication circuits of Listed equipment.

Low voltage circuits (35 volts or less) shall be supplied from the engine starting battery or an isolated secondary circuit.

Suitable for pollution degree 3 environments when voltage sensing inputs do not exceed 300V. When voltage sense leads used to measure more than 300V controller to be installed in an unventilated or filtered ventilation enclosure to maintain a pollution degree 2 environment.

When factory installed, the controller shall be installed in accordance with the NEC (United States) and the CEC (Canada).

3.2.5 Grounding

The grounding point of this module is either the back of the case (around the unpainted mounting holes), or pin 8 on connector J2. Only one of these methods should be used. If using the case, one option is to make sure one of the mounting holes mates to an unpainted metal surface that is grounded. The screw holes on the PCB connectors that fasten the mating connectors are also bonded to ground internally to the PCB.

3.2.6 Wiring Requirements

When selecting the type of wire to use, consideration must be given to the wire voltage drop (line loss), accuracy, communication error, and other requirements. See Table 5.

©2024 Caterpillar All rights reserved

Caterpillar: Confidential Green

Table 5: Wiring Requirements

Component	Wire Size (AWG)	Type of Wire	Connections [1]
Three-Wire Sensors (When applicable. Not used on all systems)	16	Shielded twisted triad cable is recommended. For conduits inside facilities, use Belden 8618. For the engine harness, use the 4G-2556 Shielded Cable. The cable must be resistant to fuel and oil. The cable must have a temperature range from -40°C (-40°F) to plus 125°C (257°F).	Deutsch DT type of connectors are recommended. If Spring Spade or Ring Terminals are used, the connection between the terminals and the wire should be crimped and soldered.
Two-Wire Components (Magnetic Speed Sensors)	16 or 18	Shielded twisted pair cable is recommended. For conduits inside facilities, use the 123-2376 Electrical Cable or the 3E-4594 Electrical Cable. For the engine harness, use the 6V-2744 Wire. The cable must be resistant to fuel and oil. The cable must have a temperature range of -40°C (-40°F) to plus 125°C (257°F).	
Primary and Accessory Data Link cable	16 or 18	Part number 153-2707 is available for lengths of up to 200ft. The cable has a temperature range of -40ºC (-40°F) to plus 125°C (257°F). For longer runs, select a cable that meets SAE J1939-11 requirements.	Deutsch DT type of connectors are recommended. If Spring Spade or Ring Terminals are used, the connection between the terminals and the wire should be crimped and soldered.
Engine Solenoids (Air Shutoff)	Multiple 14	Stranded wire normally used on engine harnesses. The cable must be resistant to fuel and oil. The cable must have a temperature range of -40°C (-40°F) to plus 125°C (257°F).	The leads of the cable should have Spring Spade Terminals or Ring Terminals. The Connection between the wire and the terminal should be crimped and soldered.
Power			
RS-485 Annunciator	14 or 16	Stranded wire normally used on engine harnesses. The cable must be resistant to fuel and oil. The cable must have a temperature range of -40°C (-40°F) to plus 125°C (257°F).	Deutsch DT type of connectors are recommended.
Ethernet Connector	18 or 20	CAT 5, CAT 5e, or CAT 6. Dual twisted pair wire maybe used to wire from the controller. Cat® part numbers 143-2454 (20 AWG), 9X-8922 (18 AWG), or quantity of 2 of 143-5018 (18 AWG) may be suitable for this purpose. The cable must be resistant to fuel and oil. The cable must have a temperature range of -40°C (-40°F) to plus 125°C (257°F).	RJ-45 male connector

[1] The number of connections must be kept to a minimum.

Suitable conductor protection shall be provided in accordance with NFPA 70, Article 240.

Shielded twisted pair cable is required for the magnetic speed sensor.

©2024 Caterpillar All rights reserved

Caterpillar: Confidential Green

J1939 CAN cable is required for CAN data links. This cable is used for maximum protection against inductive noise, electromagnetic interference, and radio frequency interference. The shield greatly reduces the amplitude of any unwanted voltages on the signal wire. The shields should not be connected to the sheet metal. If the shields are connected to sheet metal, the connections are susceptible to loose bolts, corrosion, etc. The faulty connections increase the resistance of the shield. Faulty connections also reduce the effectiveness of the shield.

Sensor shields should be brought to the controller if pins are allocated on the controller for that purpose. When the cable terminates at junction boxes, the shields must be connected to each other to maintain a continuous path. A continuous path must be maintained in the shield wire for sensors, whenever possible. Wire exposed beyond the shield should be as short as possible. When no provisions exist to incorporate the draining of the shield wire internal to the controller, the shield must be connected to battery negative as close to the controller as possible. Shields should be drained at one point only. When possible, this should be done at, or
close to, the controller.

To avoid electromagnetic interference, do not run shielded signal wires near other wires carrying large currents. In installations with unavoidable risk of electromagnetic interference (EMI), shielded wire run in conduit, extra shielding, or other precautions may be necessary.

3.3 Power Requirements/Specifications

The controller is capable of operating on either a 12VDC, or a 24VDC nominal system (min 9VDC, max 32VDC). The maximum power consumption of the controller with all I/O at maximum power drain does not exceed 1.75A at 12VDC, 1A at 24VDC, at 70 degrees C.

The controller meets the cranking requirements specified in Table 6 and Figure 5, below.

Table 6: Starting Profile Waveform Parameters

Parameter	12V System	24V System
Us6 (V)	6	8
Us (V)	-6	-12
tf	5ms	10ms
t6	15ms	50ms
t7	50ms	
t8	10s	
tr	100ms	
Pulses	10	
Interval	20s	

©2024 Caterpillar All rights reserved

Caterpillar: Confidential Green

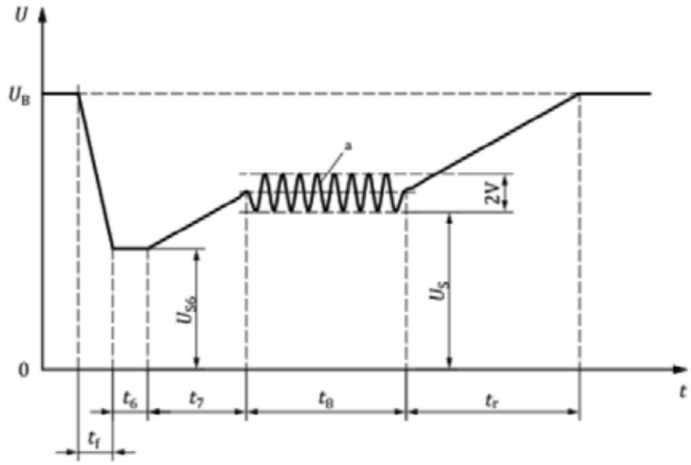

Figure 5: Starting Profile Waveform

The controller requires additional consideration for cranking voltage when used on a 12VDC nominal system (see Figure 6).

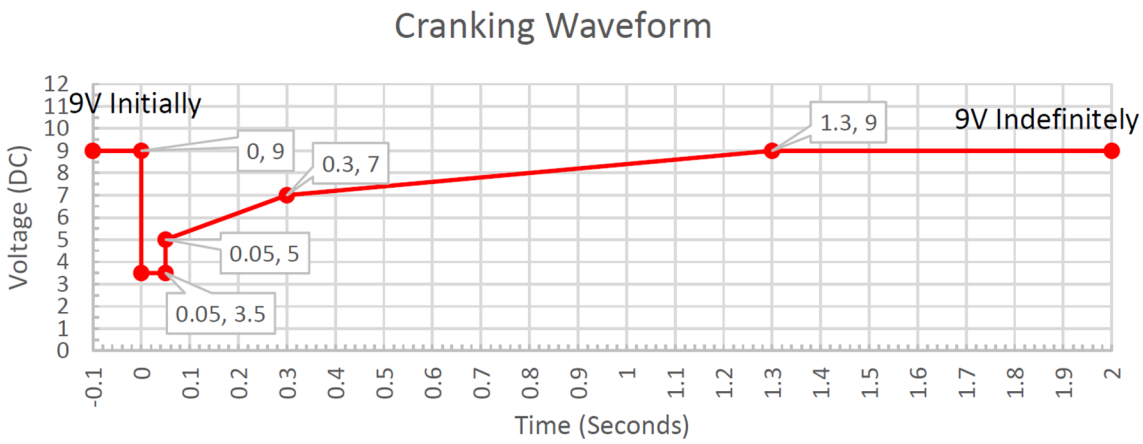

Figure 6: 12V Cranking Waveform

There must be a single path to Battery (-) (at the batteries) from the controller with no components in series with this path. There should be no more than three connectors in this path between the Battery (-) terminal and the controller. This Battery (-) line must be reserved for the controller and its associated components. Additional relays, customer connections, controllers, etc. must use a completely separate connection back to the Battery (-) terminal (at the batteries).

The Battery (-) and (+) terminals of the controller, or related components, must not be connected to the genset frame. The controller shall not be used as a tie point for looping battery power. Daisy-chaining of Battery (+) or Battery (-) leads is not recommended (in order to achieve separation of DC circuits).

When a Battery (-) reference signal that is sent out (or detected) by the controller has no designated return point, this signal should connect to the same Battery (-) source the controller uses. On a customer contact, the return will connect to the customer Battery (-), or reference. Terminals need to be supplied on package for this purpose, in many cases.

©2024 Caterpillar All rights reserved

Caterpillar: Confidential Green

4 Communications

4.1 CAN

The controller hardware supports both CAN1 (Primary) and CAN2 (Accessory). Refer to SAE J1939-71 for further details.

Note: Specific modules supported depends on the software loaded onto the controller.

J1939 CAN cable is required for CAN data links. This cable is used for maximum protection against inductive noise, electromagnetic interference, and radio frequency interference. The shield greatly reduces the amplitude of any unwanted voltages on the signal wire. The shields should not be connected to the sheet metal. If the shields are connected to sheet metal, the connections are susceptible to loose bolts, corrosion, etc. The faulty connections increase the resistance of the shield. Faulty connections also reduce the effectiveness of the shield.

CAN1

All controllers have a communications connection, utilizing CAN 2.0B physical layer as defined by ISO 11898, and is available for communicating with the engine control module (ECM), automatic voltage regulators, on-package expansion thermocouple modules for use with engine temperatures, and the Cat® Clean Emissions Module System.

The software loaded onto the controller determines if this port is active.

CAN 2

An accessory data link connection is provided for use with the local and remote, fixed output annunciator options for distances up to 800 feet from the control module. The connection supports a maximum of four "CAN" annunciator modules. This data link is for Cat® approved modules only.

Custom Events are only supported for the first 3 DIO modules. A 4th DIO module is supported, but it will not support custom events.

The total number of optional modules should not exceed four annunciators, four I/O modules, and two temperature modules (RTD or TC).

The software loaded onto the controller determines if this port is active.

4.2 RS-485

The controller supports 2-wire, half duplex SCADA communications over RS-485, depending on the software capabilities (typically used only for the long-distance annunciator, NOT the MODBUS communications). See "Appendix A" for pin assignments.

4.3 4-Wire Ethernet

The controller has four RJ-45 connectors using T568B wiring (straight through - see Figure 7). This is a 10Base-T/100Base-T Ethernet connection. MODBUS TCP/IP typically uses one of these ports.

©2024 Caterpillar All rights reserved

Caterpillar: Confidential Green

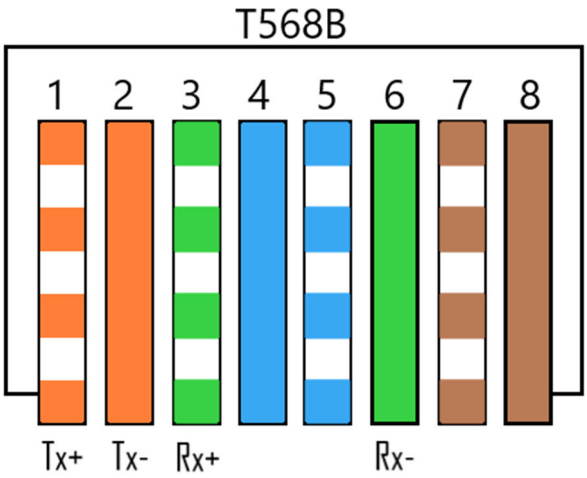

Figure 7: T568B Wiring

Specific use of each of the ports will depend on the software loaded into the controller. Details of whether these ports support automatic switching is also software dependent.

4.4 2-Wire Ethernet

The design includes a single, dual 2-Wire Ethernet connector. This part has 2 differently keyed connectors. The harness mating connectors are 490-0571 (key A) and 490-0578 (key B). The terminals that fit inside these connectors are 478-1707. Those terminals fit 18-20AWG wire.

Pin 1 is the positive (TRX_P+) terminal. Pin 2 is the negative (TRX_M-) terminal.
Specific use of each of the ports will depend on the software loaded into the controller.

Port B uses the “B” key. Port A uses the “A” key.

©2024 Caterpillar All rights reserved

Caterpillar: Confidential Green

5 Inputs

The controller supports the following types of inputs listed in Table 7.

Table 7: Controller Inputs

Input Type	# Channels	Notes
Discrete	16	Only 4 return to GND pins are supplied on the controller at the J1 connector, near to the input pins.
Isolated Discrete	1	Reserved for START signal, includes its own reference return pin
Analog	3	2-wire, plus shield (Voltage, or Resistive), shared 5V supply. A Batt- pin is available on the same connector and may be used to drain the shields.
MPU	1	2-wire, plus shield

5.1 Discrete Inputs

The controller supports 16 non-dedicated programmable switch-to-battery negative discrete inputs. Multiple inputs may share a common return pin. All the Digital Inputs are on connector J1. There are four (4) return to Batt- (gnd) pins on the J1 connector. These are all internally connected, but each group of four inputs should be referenced to its own return pin (4 inputs per return pin only) to prevent overload on the internal traces of the controller circuit board. These pins are at Batt- voltage but should not be used for connection to Batt- for the controller.

An input must be physically pulled low (below 3V) to make it a logical low signal. Each input will “float” high if not connected to a signal. The input is considered “high” at 4V.

5.2 Isolated Digital Input

The controller supports a single Isolated Digital Input with its own reference pin. The reference pin can be a separate signal from the other Digital Input return signals. This input is on connector J4, pin 2 (pin 1 is the reference pin) and may be used as a Start signal in many cases (depending on the software).

5.3 Analog Inputs

The controller supports three 2-wire (plus shield) individually non-isolated analog inputs. These are individually selectable 0-5V or ratiometric Resistive Sender inputs for interface to senders, customer signals, etc. The return is assumed to be common with Batt-. The following modes of operation are available:

- Voltage mode: 1% accuracy
- Resistive Sender Mode: 1% accuracy

The controller offers a single non-isolated 5V power supply capable of supplying 200mA and has overload protection. This supply is to be used to provide power to sensors if required by the source power pin and analog input negative. This supply is referenced to Battery (-) and is common to all the Analog Inputs.

The specific sensor ranges in Table 8 are supported by the controller (see Analog Input Mapping Section).

©2024 Caterpillar All rights reserved

Caterpillar: Confidential Green

The software loaded onto the controller will determine specific ranges supported.

Table 8: Supported Analog Input Sensor Modes

Sensor Mode	Range
Resistive 1 (499 Ohm PU)	0-4999 Ohms*
Resistive 2 (7200 Ohm PU)	0-72000 Ohms*
Voltage	0-5 Volts**

*This is a rough range. See discussion on Resistive Sensor Range below.
**This is a physical range. Software may allow for additional ranges within this limit.

Sensor shields should be brought as close to the controller as possible, then brought to GND.

Resistive Sensor Range
When selecting sensors, ensure the sensor range is within the controller Pull Up resistor range and the map range. Typically, the software will handle changing between input ranges automatically. This means that two ranges will not need to be considered when using the Resistive mode.

The Pull Up resistor determines what value of sensor resistance will generate 2.5VDC on the controller input (499 or 7200 Ohms). This voltage level is the midpoint of the voltage range for the controller input when in Resistive mode. Practically speaking, this helps determine what resistive range (Pull Up resistor) to select based on the sensor resistance range. Select the resistive range (Pull Up resistor) based on the sensor value, unless the software does this selection automatically. See the software manual for the application for more details.

As a rule, if a resistive sensor has a range of 0-4999 Ohms, Resistive Range 1 should be selected. If a resistive sensor has a range of 0-72000 Ohms, Resistive Range 2 should be selected, if the range is selectable in software. It is recommended to not use resistors above 36000 Ohms to get the best accuracy.

Note: The Resistive Ranges available will be determined by the software on the controller.

Table 9 shows the actual voltages seen on the controller input for different restive sensor values for each of the Pull Up resistor choices. The software selectable maps will translate actual resistance values to voltage for the controller to understand what the resistive sensor is measuring (level, percentage, temperature, etc.). Table 10 shows the equivalent value of sensor resistances for specific controller input voltages.

See the software manual for specific details on the programmable ranges.

©2024 Caterpillar All rights reserved

Caterpillar: Confidential Green

Table 9: Analog Input Resistive Sensor Voltage Values Based on Resistance

PU=499 Ohms		PU=7200 Ohms	
Resistance (Ohms)	Volts (VDC)	Resistance (Ohms)	Volts (VDC)
0	0	0	0
55.45	0.500045	100	0.068493
100	0.834725	500	0.324675
500	2.502503	800	0.5
1000	3.335557	1000	0.609756
1500	3.751876	1500	0.862069
2000	4.001601	2000	1.086957
2500	4.168056	2500	1.28866
3000	4.286939	3000	1.470588
3500	4.376094	3500	1.635514
4000	4.445432	4000	1.785714
4491	4.5	4500	1.923077
5000	4.546281	5000	2.04918
5500	4.584097	6000	2.272727
6000	4.616095	7000	2.464789
6500	4.643521	8000	2.631579
7000	4.667289	9000	2.777778
7500	4.688086	10000	2.906977
8000	4.706436	20000	3.676471
8500	4.722747	30000	4.032258
9000	4.737341	40000	4.237288
9500	4.750475	50000	4.370629
10000	4.762358	60000	4.464286
		64800	4.5

Table 10: Analog Input Resistance Values for Specific Controller Voltages

PU=499 Ohms		PU=7200 Ohms	
Volts (VDC)	Resistance (Ohms)	Volts (VDC)	Resistance (Ohms)
0	0	0	0
0.5	55.44444	0.5	800
1	124.75	1	1800
1.5	213.8571	1.5	3085.714
2	332.6667	2	4800
2.5	499	2.5	7200
3	748.5	3	10800
3.5	1164.333	3.5	16800
4	1996	4	28800
4.5	4491	4.5	64800
5	Infinite	5	Infinite

©2024 Caterpillar All rights reserved

Caterpillar: Confidential Green

5.4 MPU Sensing Inputs

The controller supports one 2-wire (plus shield) differential magnetic pick-up (MPU) input. This MPU input should not be referenced to battery positive or battery negative.

Shielded twisted pair cable is required for the magnetic speed sensor.

Draining of the shield is internal to the controller.

The shield should not be connected to chassis ground or earth ground at any point. A continuous path must be maintained in the shield wire for sensors. A continuous path must be maintained in the shield with no more than one break (connection) between the sensor and the controller. The amount of unshielded cable should be minimized as much as possible. There should be no stubs in the shielded twisted pair.

©2024 Caterpillar All rights reserved

Caterpillar: Confidential Green

6 Outputs

The controller supports the following types of outputs listed in Table 11.

Table 11: Controller Outputs

Input Type	# Channels	Notes
Discrete	12	300mA Sinking
Analog	2	2-wire, plus shield (Voltage, or Current)
PWM	3	2-wire, plus shield

6.1 Discrete Outputs

The controller supports twelve discrete sinking outputs capable of sinking 200mA per channel internally to Batt (-). This means any relay connected to these outputs will be connecting to the negative side of the relay coil, with the positive side of the coil connected to Batt (+) (see Figure 8). Note that the controller is represented by the left most box and includes the transistor. These outputs are protected up to 300mA sinking per channel, however, it is not recommended that all outputs try to sink 300mA simultaneously. The average of all outputs should not exceed an average of 200mA.

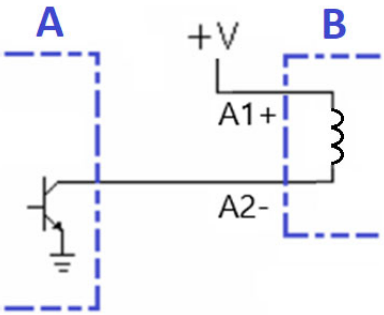

A. Controller Sinking Digital Output
B. Relay

Figure 8: Digital Output Wiring

Note: Check the load connected to a Digital Output to determine if a slave relay is needed (breaker control coil, contactor, etc.). Also, check the drop out voltage of the connected relay coil in case of a low voltage condition due to engine cranking (see “Power Requirements/Specifications”).

6.2 Analog Outputs

The controller supports two 2-wire (plus shield) non-isolated analog output channels, with a minimum of 10 bits (1024 points) of resolution supported. The shield should be grounded as close to the controller as possible.

The Analog Outputs have an error of 0.1% and can be configured for the following types and ranges listed in Table 12.

©2024 Caterpillar All rights reserved

Caterpillar: Confidential Green

Table 12: Analog Output Types and Ranges.

Type	Range
Voltage	-10 to +10V
	-5 to +5V
	0 to +5V
Current	0 to 20mA

6.3 PWM Outputs

The controller supports three 2-wire (plus shield) non-isolated analog PWM output channels (50mA). The shield should be grounded as close to the controller as possible.

PWM outputs (500 Hz) are accurate within 0.5%, with a minimum of 10 bits (1024 levels) of usable resolution from 0-100%.

©2024 Caterpillar All rights reserved

Caterpillar: Confidential Green

7 AC Sensing

The J6 connector typically measures the Load Voltage, J5 typically measures the Line Voltage, and J7 typically measures the Line Current.

7.1 AC Metering Accuracy

The maximum errors discussed here are for the controller alone. Overall error in voltage and current metering is a summation of the controller maximum error and the errors of components outside of the controller. These component errors may include, but are not limited to, potential transformer (PT) and current transformer (CT) errors, electrical noise, temperature rise, and wiring impedance. **The controller does not determine the system accuracy alone, the overall system error does**. Table 13 shows the AC metering accuracy.

Table 13: Controller AC Metering Accuracy

Measurement	Error
Voltage Measurement (shipped)	0.1%
Voltage Measurement (lifetime)	0.25%
Current Measurement up to 100%	0.1%
Current Measurement 100-200%	0.4%
Current Measurement 200-250%	3.125%
Current Measurement 250-400%	12.5%
Current Measurement 400-800%	50%
Worst-case Phase A frequency measurement*	+/-0.2% Hz
Worst-case Line to Load phase measurement	1 degree

*Frequency is only measured on phase A for error accuracy.

The values in Table 13 are applicable for both the 1A and 5A current input ranges and the values are measured in Amperes RMS.

Power values are calculated values based upon the metered values of voltage, current, and phase angle**.** **The accuracy of the power values is dependent upon the overall system inaccuracies**.

7.2 Voltage Sensing

The controller has four-wire true RMS 3-phase voltage sensing up to 600VACrms L-L nominal at 50Hz or 60Hz for both Line and Load. The application will determine what constitutes the Line, and what constitutes the Load. The controller measures L-N voltage (nominal sensing of 347VACrms), then calculates L-L.

Note: If a high resistance ground connection is used, the controller may not be able to measure the voltage correctly in the case of a L-N fault condition if L-N Voltage exceeds 551VAC.

The phase difference between the Line and Load inputs is measured on phase A. The software may, or may not, support dissimilar PT configurations between the Load side and Line side inputs. For this reason, before installing PTs, consult the software options to determine if phase shifting PTs are supported, or

©2024 Caterpillar All rights reserved

Caterpillar: Confidential Green

needed. If dissimilar PT configurations are used, an additional PT may be needed to correct the phase angle.

7.3 Current Sensing

The controller has six-wire true RMS current sensing with selectable 1A/5A CT secondaries (software permitting). The current sensing is tied to the Line side voltage sensing.

Current inputs shall be connected through Listed or Recognized isolating current transformers with the secondary rating of 5A max.

The controller monitors 3-phase current and provides overcurrent protection. Advanced AC metering is standard on the controller and includes power metering information for average and per phase real, reactive, apparent power and power factor. It also includes total kWh, total kVAR and percentage real, reactive and apparent power (software permitting).

The current return pins should be connected to chassis ground on the genset. This is required since a CT will operate as an isolation transformer and the voltage of the secondary needs to be referenced to ground.

The CT burden is as follows:

- 5A Secondary: 0.5VA
- 1A Secondary: 0.2VA

Selection of CTs is a critical factor for both the accuracy of the controller metering, and for the capability of the controller to provide overcurrent protection. When a current transformer saturates, the secondary current is no longer radiometric with the primary current. This will cause secondary current to decrease. Both phase angle error and ratio accuracy must also be considered in the selection of the CT. Phase angle error introduces significant kW calculation error when a power source is not operating near unity power factor.

©2024 Caterpillar All rights reserved

Caterpillar: Confidential Green

8 Programming

The controller does not have an embedded display. Programming is accomplished via Cat® ET. In some cases, programming may be available via a separate HMI. See the software and HMI specific documentation for details.

©2024 Caterpillar All rights reserved

Caterpillar: Confidential Green

Appendix A Connectors, Wiring, and Pinout

Figure 9 shows the layout of the connectors on the controller with their names, orientation, and pin designations. The shape of the connector is also shown. Note that some of the connectors are rotated 180 degrees from other connectors. The case of the controller is etched with this information.

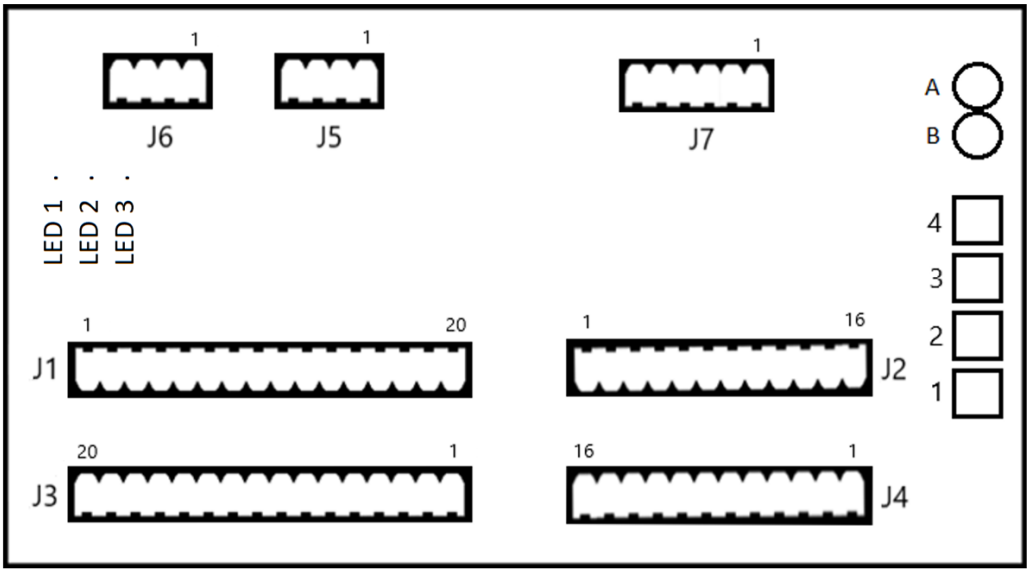

Figure 9: Connector Layout

Note: J6 is typically the Load Voltage, J5 is typically the Line Voltage, and J7 is typically the Line Current. The 4-wire Ethernet ports are labeled 1-4, while the 2-wire Ethernet ports are labeled A & B.

The distance from the edge of the controller case to the center of each connector is shown in Table 14 (see red arrows in Figure 10).

Table 14: Distance from the Edge of the Controller Case to the Center of the Connector

Connector	Distance (mm)
J1/J2	28.1
J3/J4	12.4
J5/J6/J7	15.4
Ethernet	16

©2024 Caterpillar All rights reserved

Caterpillar: Confidential Green

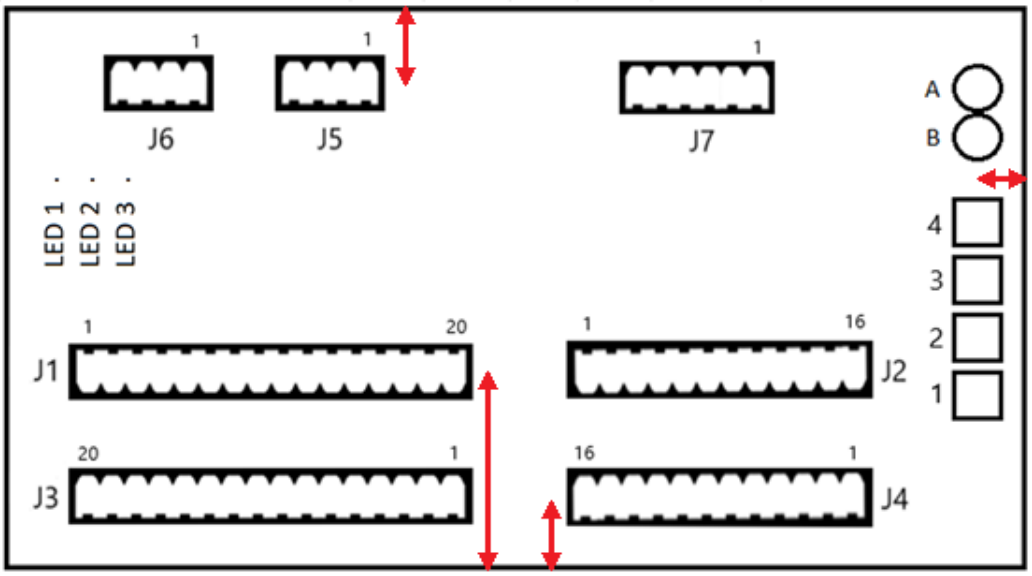

Figure 10: Connector Distance from the Edge of the Controller Case

The mating harness connectors numbers for the controller hardware are shown in Table 15.

Table 15: Harness Connectors

Conn#	Cat® P/N	Min AWG	Max AWG	Max mm2	Max Torque	Strip Length	Entry
J1	613-2086	20	13	2.5	4.5 lbin	10	Top
J3	613-2087	20	13	2.5	4.5 lbin	10	Side
J2	613-2088	20	13	2.5	4.5 lbin	10	Top
J4	613-2089	20	13	2.5	4.5 lbin	10	Side
J5/J6	613-2090	18	4	10	4.5 lbin	18	Top
J7	613-2091	18	4	10	4.5 lbin	18	Top

The J1-J4 mating connectors are push in type terminals, while the J5-J7 mating connectors are spring cage type. All these connectors have screw flanges for added strength after installation. The flange screws on the J1-J4 connectors have a **0.3Nm** torque spec for tightening, and the J5-J7 connectors have a **0.3-0.7Nm** torque spec for tightening. Figure 11 shows the pin assignments on J1-J4 along with the pin assignments on the voltage and current sensing connectors (J5-J7) and the ethernet connector pins.

Note: For wiring schematics, see application specific documentation.

©2024 Caterpillar All rights reserved

Caterpillar: Confidential Green

Pin	J1
1	SWB1
2	SWB2
3	SWB3
4	SWB4
5	SWB RTNA
6	SWB5
7	SWB6
8	SWB7
9	SWB8
10	SWB RTNB
11	SWB9
12	SWB10
13	SWB11
14	SWB12
15	SWB RTNC
16	SWB13
17	SWB14
18	SWB15
19	SWB16
20	SWB RTND

Pin	J2
1	CAN2 H
2	CAN2 L
3	CAN2 SHLD
4	PWM OUT1
5	PWM RTN1
6	PWM OUT2
7	PWM RTN2
8	GND/PE
9	BATT-
10	MPU+
11	MPU-
12	MPU SHLD
13	AO1
14	AO1RTN
15	AOUT2
16	AO2 RTN

Pin	J3
1	CAN1 SHLD
2	CAN1 L
3	CAN1 H
4	DO12
5	DO11
6	DO10
7	DO9
8	DO8
9	DO7
10	DO6
11	DO5
12	DO4
13	DO3
14	DO2
15	DO1
16	BATT-
17	BATT-
18	BATT+
19	BATT-
20	BATT+

Pin	J4
1	ISO DI REF
2	ISO DI
3	5V SPLY
4	AIN3 RTN
5	AIN3
6	AIN2 RTN
7	AIN2
8	AIN1 RTN
9	AIN1
10	BATT-
11	RS485 SHLD
12	RS485 REF
13	RS-485 A-
14	RS-485 B+
15	PWM RTN3
16	PWM OUT3

Pin	J5
1	GENV-A
2	GENV-B
3	GENV-C
4	GENV-N

Pin	J6
1	BUSV-A
2	BUSV-B
3	BUSV-C
4	BUSV-N

Pin	J7
1	GENA-A-
2	GENA-A+
3	GENA-B-
4	GENA-B+
5	GENA-C-
6	GENA-C+

4-Wire Ethernet	
1	TX+
2	TX-
3	RX+
4	RX-

2-Wire Ethernet	
1	TRX P (+)
2	TRX M (-)

Figure 11: Controller Pinout

©2024 Caterpillar All rights reserved

Caterpillar: Confidential Green

THIS PAGE INTENTIONALLY LEFT BLANK

©2024 Caterpillar All rights reserved

Caterpillar: Confidential Green

LET'S DO THE WORK.™

Information contained in this publication may be considered confidential. Discretion is recommended when distributing. Materials and specifications are subject to change without notice.

© 2024 Caterpillar. All Rights Reserved. CAT, CATERPILLAR, LET'S DO THE WORK, their respective logos, "Caterpillar Corporate Yellow," the "Power Edge" and Cat "Modern Hex" trade dress as well as corporate and product identity used herein, are trademarks of Caterpillar and may not be used without permission.

www.cat.com/electricpower

Caterpillar: Confidential Green